SELF-PROPELLED SCISSOR LIFTS

PARTS MANUAL

(For JCPT0708DCS)

WARNING

THE MANUFACTURER SHALL NOT BE HELD LIABLE IN CASE OF FAULTS OR ACCIDENTS DUE TO NEGLIGENCE, INCAPACITY, INSTALLATION BY UNQUALIFIED TECHNICIANS AND IMPROPER USE OF THE MACHINE

DO NOT OPERATE THIS MACHINE UNTIL YOU READ AND UNDERSTAND ALL THE DANGERS,WARNINGS AND CAUTIONS IN THIS MANUAL

Part Number: SM0117225_Rev2.4

CE ANSI

Zhejiang Dingli Machinery Co., Ltd. Second Edition, November 2019 Printing

Version of the Record

Version Number	Create Date
SM0117225_Rev1.0	2017-09
SM0117225_Rev2.0	2017-11
SM0117225_Rev2.1	2018-05
SM0117225_Rev2.2	2018-12
SM0117225_Rev2.3	2019-12
SM0117225_Rev2.4	2020-12

Table of Contents

Section 1 Chassis

101.1 Steer Linkage and Wheels Assembly 2
102.1 Drive Wheel Assembly 5
103.1 Pothole Protection Assembly 7
104.1 Battery Pack Module 9
105.1 Hydraulic Power Unit 12
106.1 Motor Controller Assembly 13
107.1 Ground Control Assembly 14
108.1 Ladder and Accessories 16

Section 2 Scissor

201.1 Scissor Assembly 20

Section 3 Platform

301.1 Main Platform Assembly 24
302.1 Platform Extension Assembly 26
303.1 Platform Locking Device Assembly 28
304.1 Platform Control Assembly 29
305.1 Platform Control Box Assembly 30

Section 4 Hydraulic System

401.1 Lower Lift Cylinder Assembly 33
402.1 Upper Lift Cylinder Assembly 35
403.1 Hydraulic Hoses and Fittings 37

Section 5 Electrical System

501.1 Electrical Harness 40
502.1 Power to Platform 43

Section 6 Decal

601.1 Decals with Words (CE) 46
602.1 Decals with Words (ANSI) 49
603.1 Decals with Symbols (CE) 52

Section 1
Chassis

101.1 Steer Linkage and Wheels Assembly

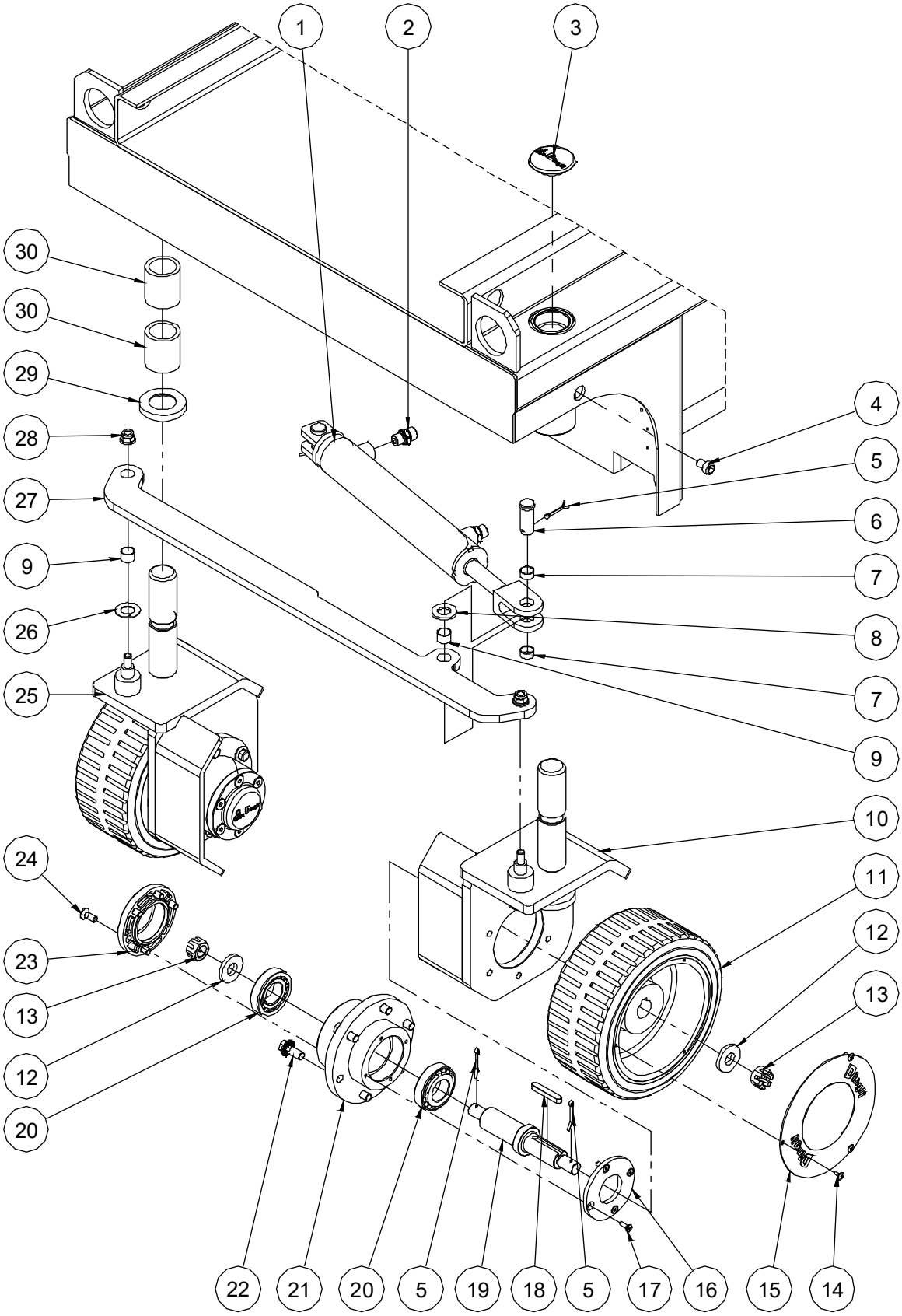

101.1 Steer Linkage and Wheels Assembly

Item	Part No.	Description	Qty.
1	10001396	Steer cylinder assembly (without seal kit)	1
--	00003068	Seal kit	1
2	00001290	Straight fitting	2
3	10001075	Cover	2
4	10001073	Screw	2
5	00002405	Cotter pin GB/T 91 4×32	6
6	00000686	891-1634.5 Pin	2
7	00000350	8812-161808 Bearing	4
8	10001074	Washer	2
9	00000351	8812-161812 Bearing	4
10	10007819	Steer yoke weldment	1
11	10001996	Wheel	2
12	10001104	Washer	4
13	00002077	Nut GB/T 9459 M16×1.5	4
14	00001002	Screw GB/T 973 M4×10	6
15	10001553	Cover	2
16	10001502	Bearing cover	2
17	00000822	Screw GB/T 70.3 M5×16	8
18	00002939	Key GB/T 1096 8×7×50	2
19	10002264	Wheel shaft	2
20	00001129	Bearing 30206 GB/T 297	4
21	10001503	Connection plate	2
22	00002887	Bolt QC/T 340 M10×25	12
23	10000638	Cap	2
24	00000765	Screw GB/T 70.3 M8×20	12
25	10007818	Steer yoke weldment	1
26	00000387	8832-18 Bearing	2
27	10002263	Tie rod	1
28	00002572	Nut GB/T 6183.1 M10	2

101.1 Steer Linkage and Wheels Assembly

Item	Part No.	Description	Qty.
29	10001072	Washer	2
30	00000417	8813-354550 Bearing	4

102.1 Drive Wheel Assembly

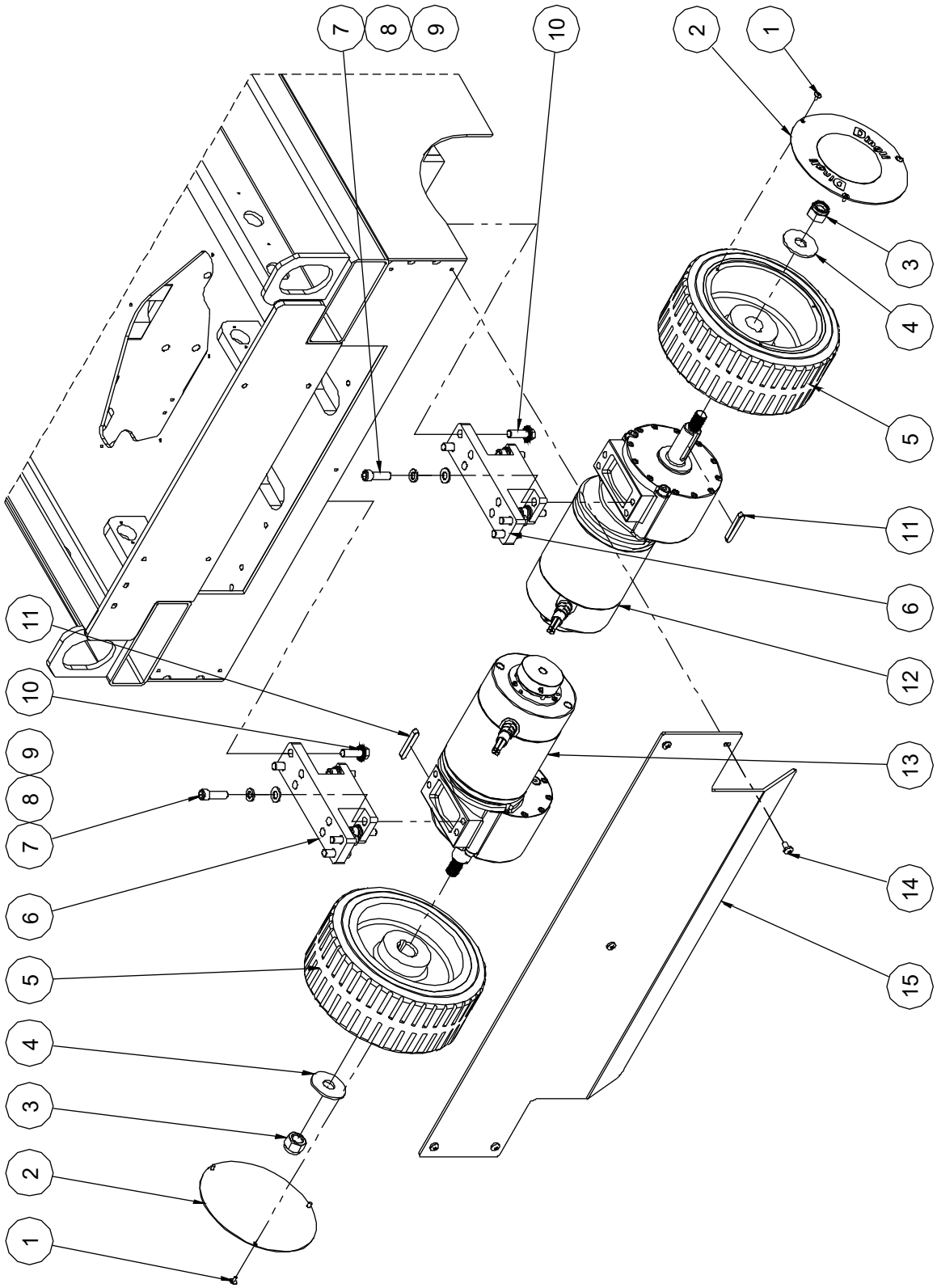

102.1 Drive Wheel Assembly

Item	Part No.	Description	Qty.
1	00001001	Screw GB/T 973 M4×8	6
2	10001553	Cover	2
3	00003070	Nut GB/T 889.2 M16×1.5	2
4	00003071	Washer GB/T 96.1 16	2
5	10001996	Wheel	2
6	10001534	Support	2
7	00001157	3/8-24×1 1/4" Screw ANSI B18.3	8
8	00005181	Washer ANSI B18.21.1 3/8	8
9	00005182	Washer ANSI B18.22.1 narrow 3/8	8
10	00005263	Bolt QC/T 340 M10×30	8
11	00002939	Key GB/T 1096 8×7×50	2
12	00005131	Right drive motor assembly	1
--	00002944	Right motor	1
--	00003325	Brake	1
--	00005194	Reducer	1
13	00005192	Left drive motor assembly	1
--	00002943	Left motor	1
--	00003325	Brake	1
--	00005194	Reducer	1
14	00001060	Screw GB/T 818 M6×12 - H	5
15	10001999	Plate (without outlet hole)	1
	10003965	Plate (with one outlet hole)	1

103.1 Pothole Protection Assembly

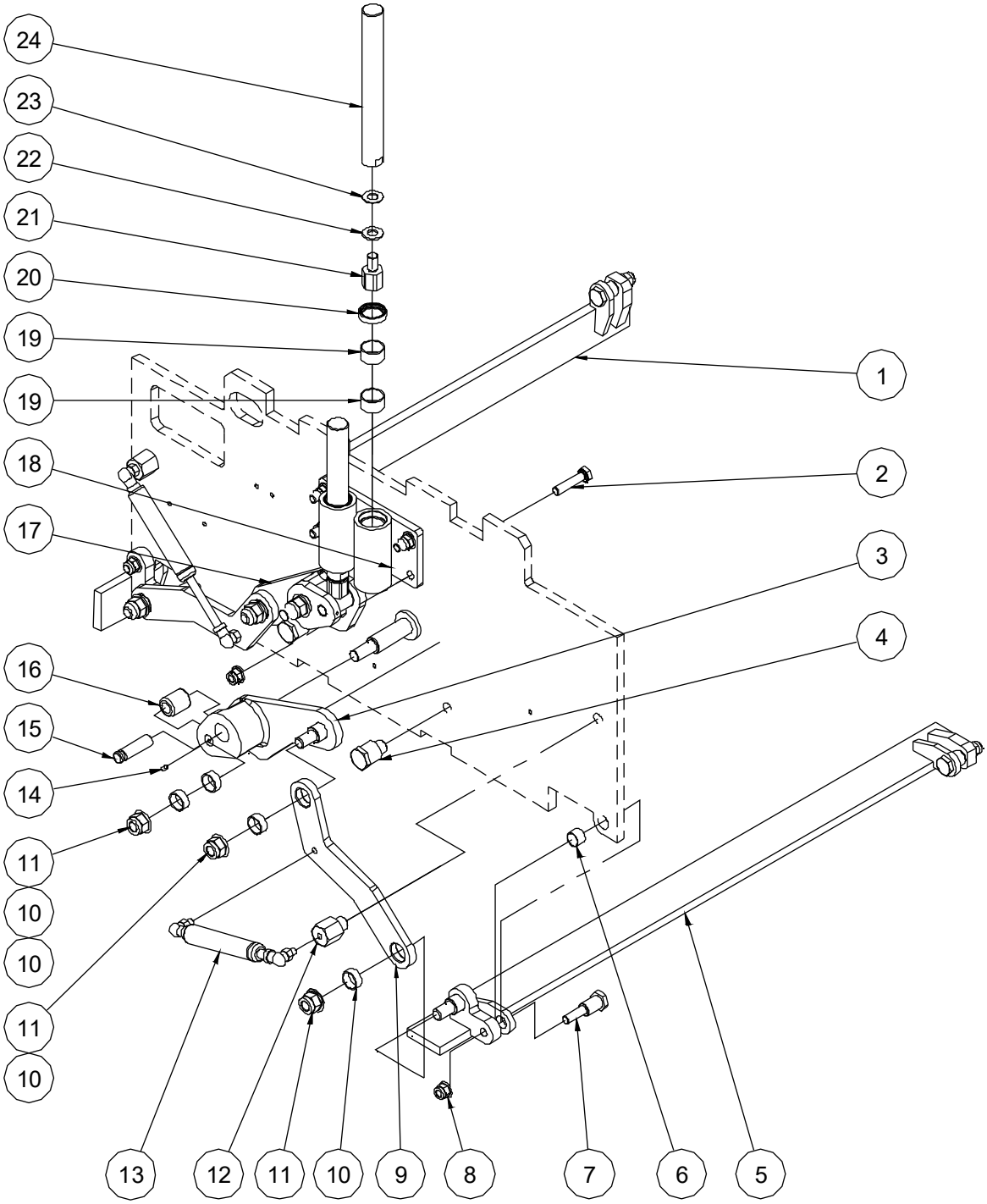

103.1 Pothole Protection Assembly

Item	Part No.	Description	Qty.
1	10002261	Pothole guard weldment	1
2	00002411	Bolt GB/T 5783 M10×45	4
3	10001467	Linkage weldment	1
4	10001466	Pin	2
5	10002259	Pothole guard weldment	1
6	00000351	8812-161812 Bearing	4
7	10001465	Pin	4
8	00002572	Nut GB/T 6183.1 M10	8
9	10002258	Pothole link plate	2
10	00000356	8812-202309 Bearing	8
11	00002577	Nut GB/T 6183.1 M14	6
12	10001464	Gas shock strut	2
13	10001495	Gas shock	2
14	00001039	Screw GB/T 78 M5×10	2
15	10001463	Pin	2
16	10001462	Roller	2
17	10001471	Linkage weldment	1
18	10014566	Pothole guide	1
19	00000367	8812-252815 Bearing	4
20	00007482	Seal GB/T 13871.1 FB 25 32 7 III	2
21	10001491	Pothole hole pusher pin	2
22	10001493	Adjusting washer 2	2
23	10001494	Adjusting washer 3	2
24	10001490	Pothole hole pusher rod	2

104.1 Battery Pack Module

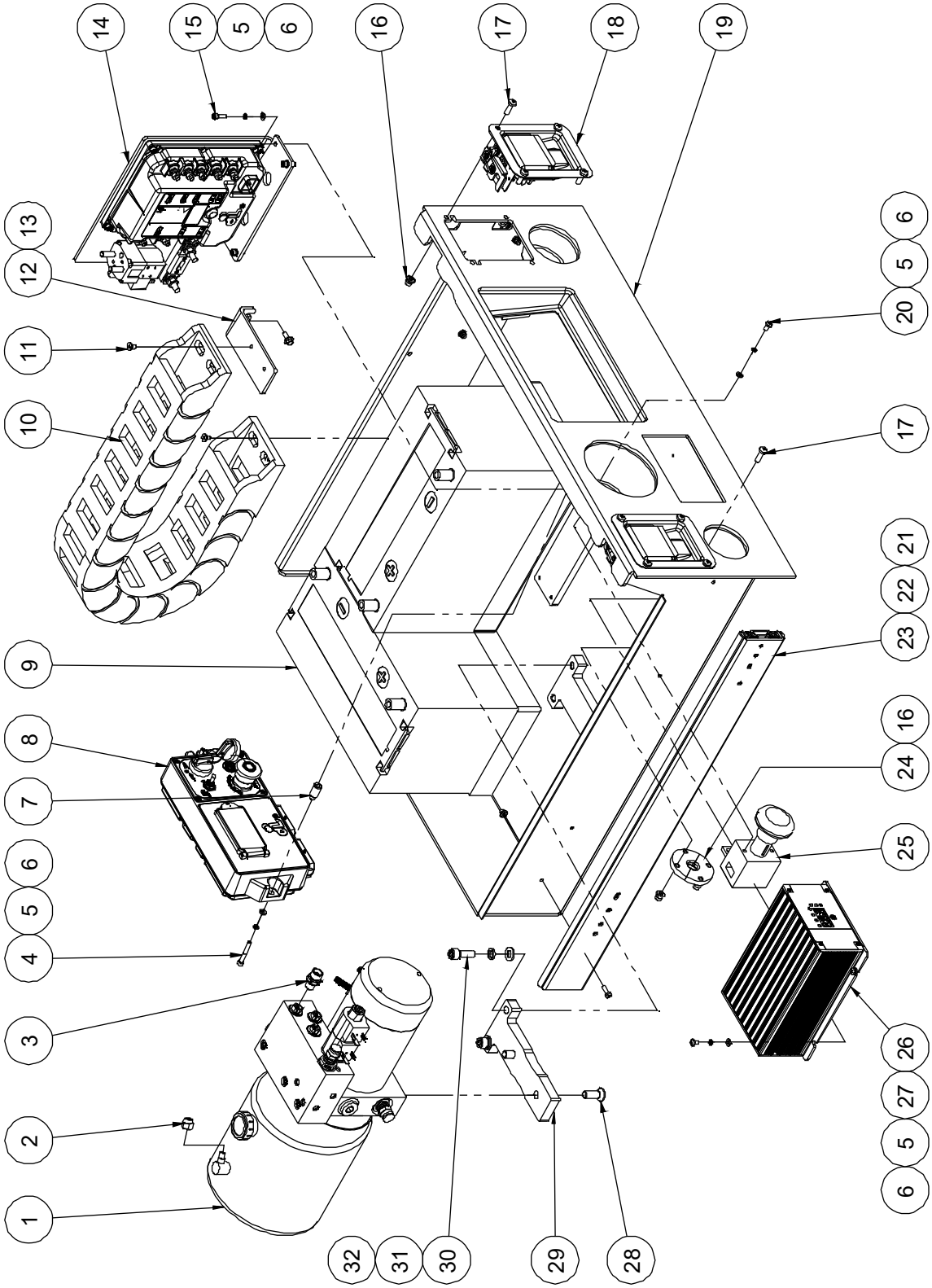

104.1 Battery Pack Module

Item	Part No.	Description	Qty.
1	00004274	Hydraulic power unit (refer to 105.1)	1
2	10000462	Nut	1
3	00001318	Straight fitting	3
4	00002392	Screw GB/T 70.1 M5×40	2
5	00000606	Washer GB/T 93 5	12
6	00000605	Washer GB/T 97.1 5	12
7	10001552	Sleeve pipe	2
8	00002362B	Ground control assembly (refer to 107.1)	1
9	00002200	Battery	2
10	10001997	Towline	1
11	00000828	Screw GB/T 70.3 M6×10	4
12	10002024	Towline bracket	1
13	00002865	Bolt QC/T 340 M6×14	2
14		Motor controller assembly (refer to 106.1)	1
15	00001246	Screw GB/T 70.1 M5×16	4
16	00002574	Nut GB/T 6183.1 M6	12
17	00001166	Screw GB/T 818 M6×20 - H	12
18	10011884	Latch	2
19	10007905	Battery tray weldment	1
	10007966	Battery tray weldment (Rear fitted changer plug)	1
20	00002319	Screw GB/T 818 M5×10 - H	2
21	00002573	Nut GB/T 6183.1 M5	8
22	00001250	Screw GB/T 818 M5×16 - H	8
23	10001541	Glide track	2
24	10000537	Half-round batten	2
25	00000655	Power switch	1
26	00005060	Charger	1
27	00002391	Screw GB/T 818 M5×8 - H	4
28	00000847	Screw GB/T 70.3 M10×30	2

104.1 Battery Pack Module

Item	Part No.	Description	Qty.
29	10001521	Bracket	1
30	00001059	Screw GB/T 70.1 M10×30	2
31	00000679	Washer GB/T 93 10	2
32	00000615	Washer GB/T 97.1 10	2

105.1 Hydraulic Power Unit

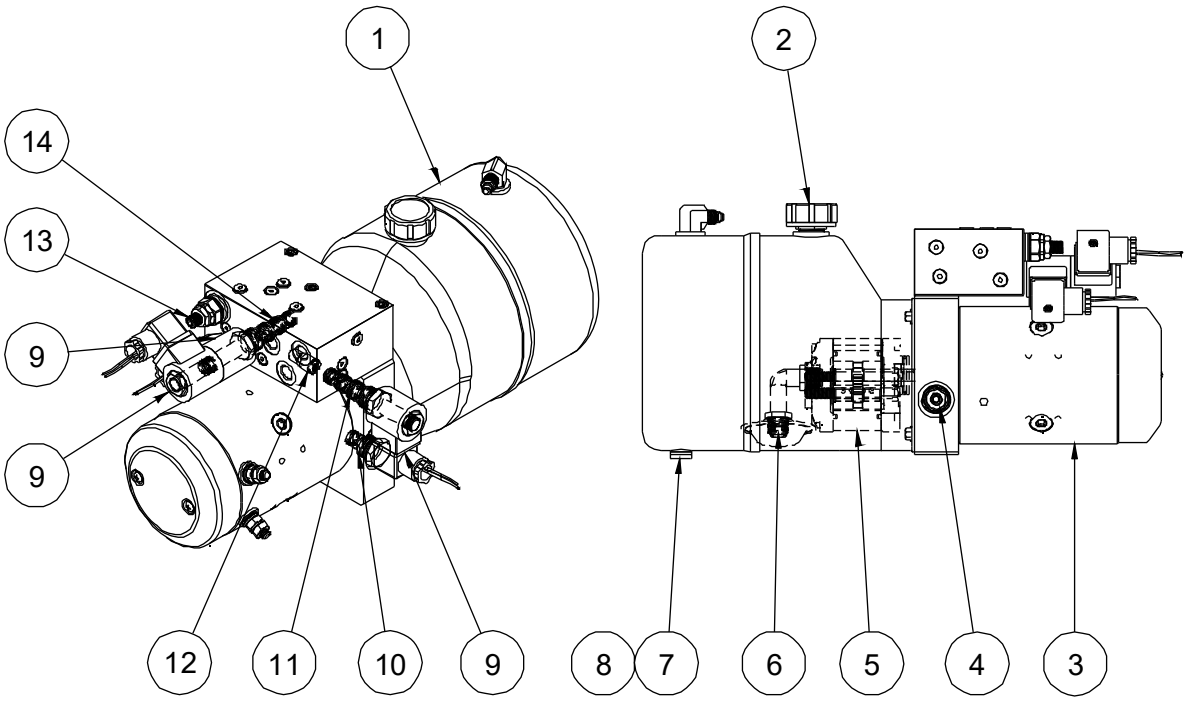

105.1 Hydraulic Power Unit

Item	Part No.	Description	Qty.
1	00004277	Tank	1
2	00004286	Tank cover	1
3	00004276	Motor	1
4	00004278	Relief valve	1
5	00004275	Pump	1
6	00004281	Filter web	1
7	00004302	Plug	1
8	00001333	Washer JB/T 982 12	1
9	00004284	Coil	3
10	00004285	Check valve	1
11	00004282	Solenoid valve spool	1
12	00004280	Pressure compensation valve	1
13	00004294	Relief valve	1
14	00004283	Solenoid valve spool	1

106.1 Motor Controller Assembly

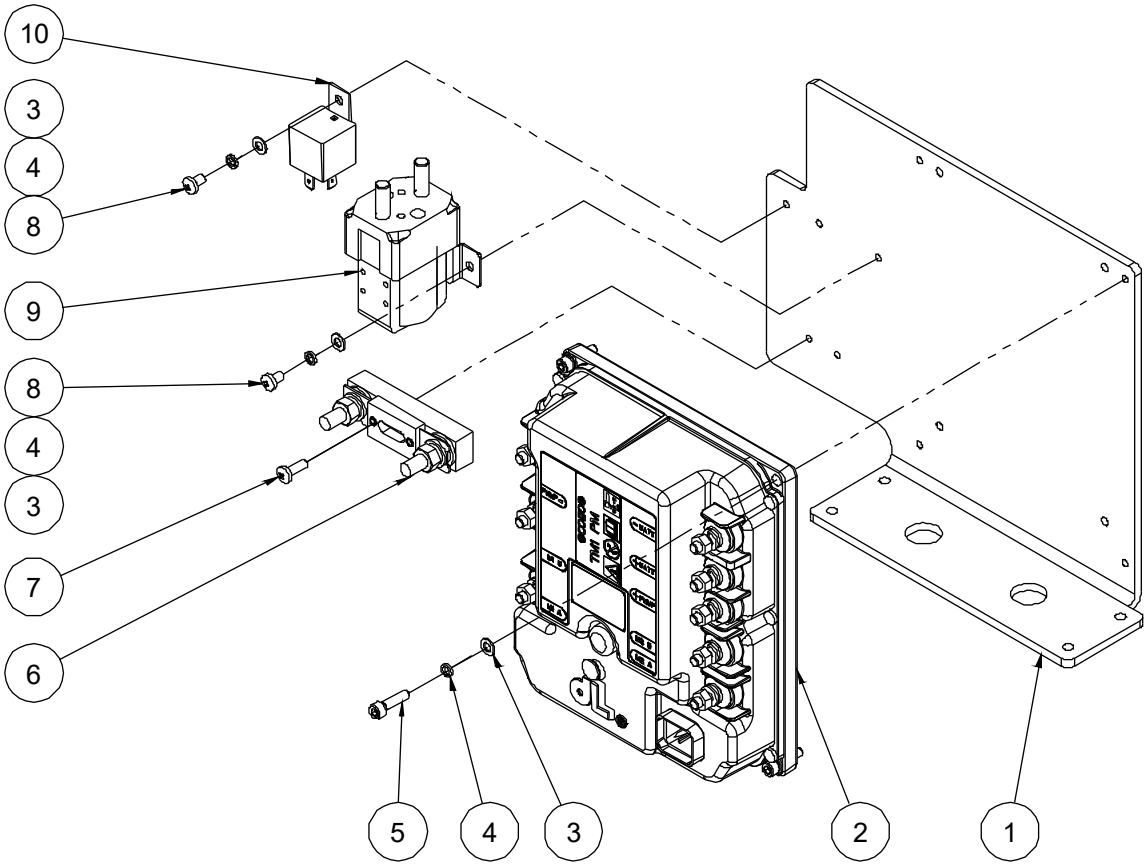

106.1 Motor Controller Assembly

Item	Part No.	Description	Qty.
1	10002960	Mounting plate	1
2	00005227	Motor controller	1
3	00000605	Washer GB/T 97.1 5	7
4	00000606	Washer GB/T 93 5	7
5	00000817	Screw GB/T 70.1 M5×20	4
6	00003069	200A Fuse assembly	1
--	00000759	200A Fuse	1
--	00000757	Fuse seat	1
7	00002313	Screw GB/T 818 M5×14 - H	2
8	00002391	Screw GB/T 818 M5×8 - H	3
9	00002028	DC Contactor	1
10	00002561	Relay	1

107.1 Ground Control Assembly

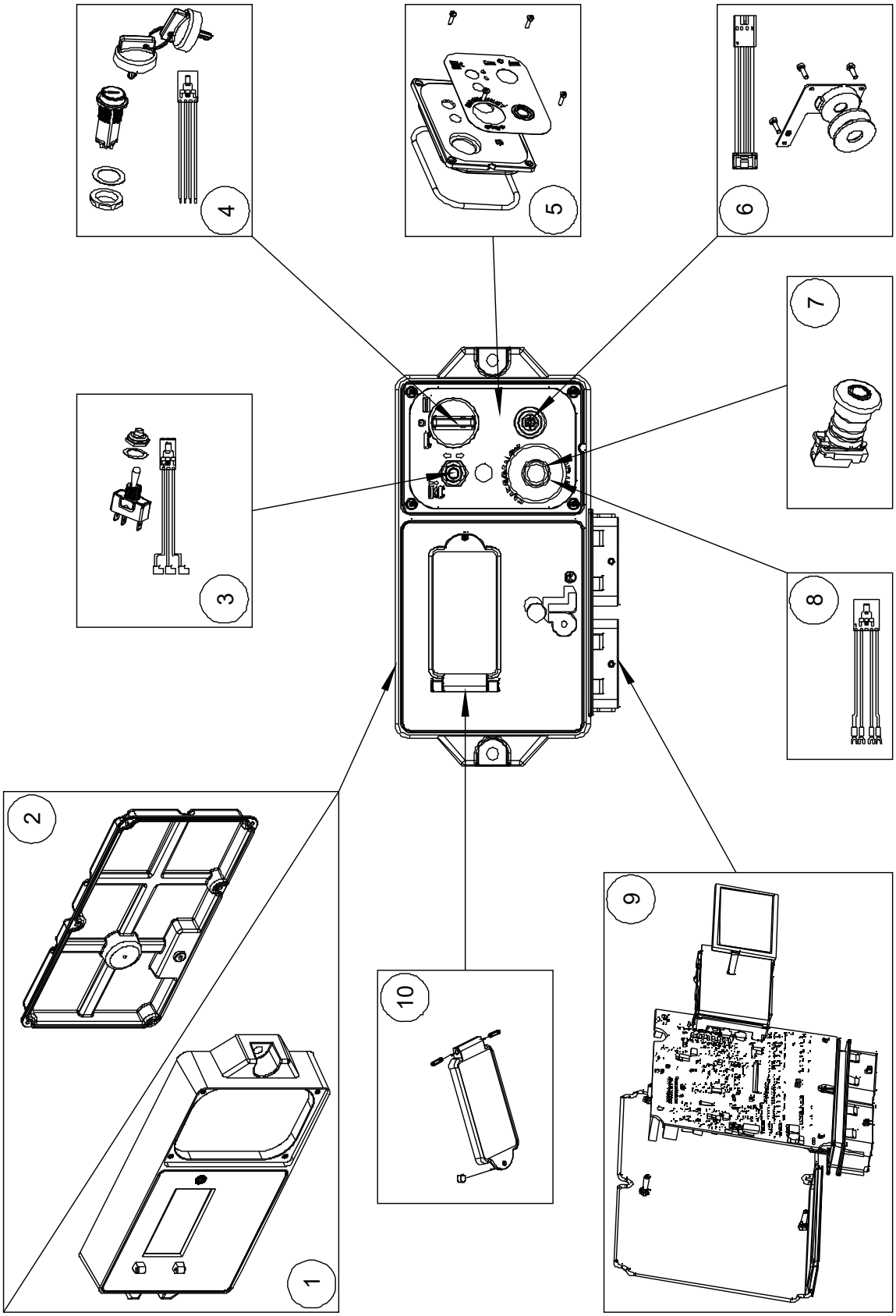

107.1 Ground Control Assembly

Item	Part No.	Description	Qty.
1	00003159	Plastic body	1
2	00003160	Plastic bottom	1
3	00004235	Toggle switch kit	1
4	00004236	Key switch kit	1
--	00003172	Key	1
5	00004238	Electromechanical panel kit	1
6	00004239	Alarm kit	1
7	00003718	Emergency stop switch	1
--	00003719	Red mushroom head	1
--	00003720	Base with 1 NC contact	1
8	00004240	Emergency stop switch harness	1
9	00004234	PCB & Display kit	1
10	00002379	Screen protector kit	1

108.1 Ladder and Accessories

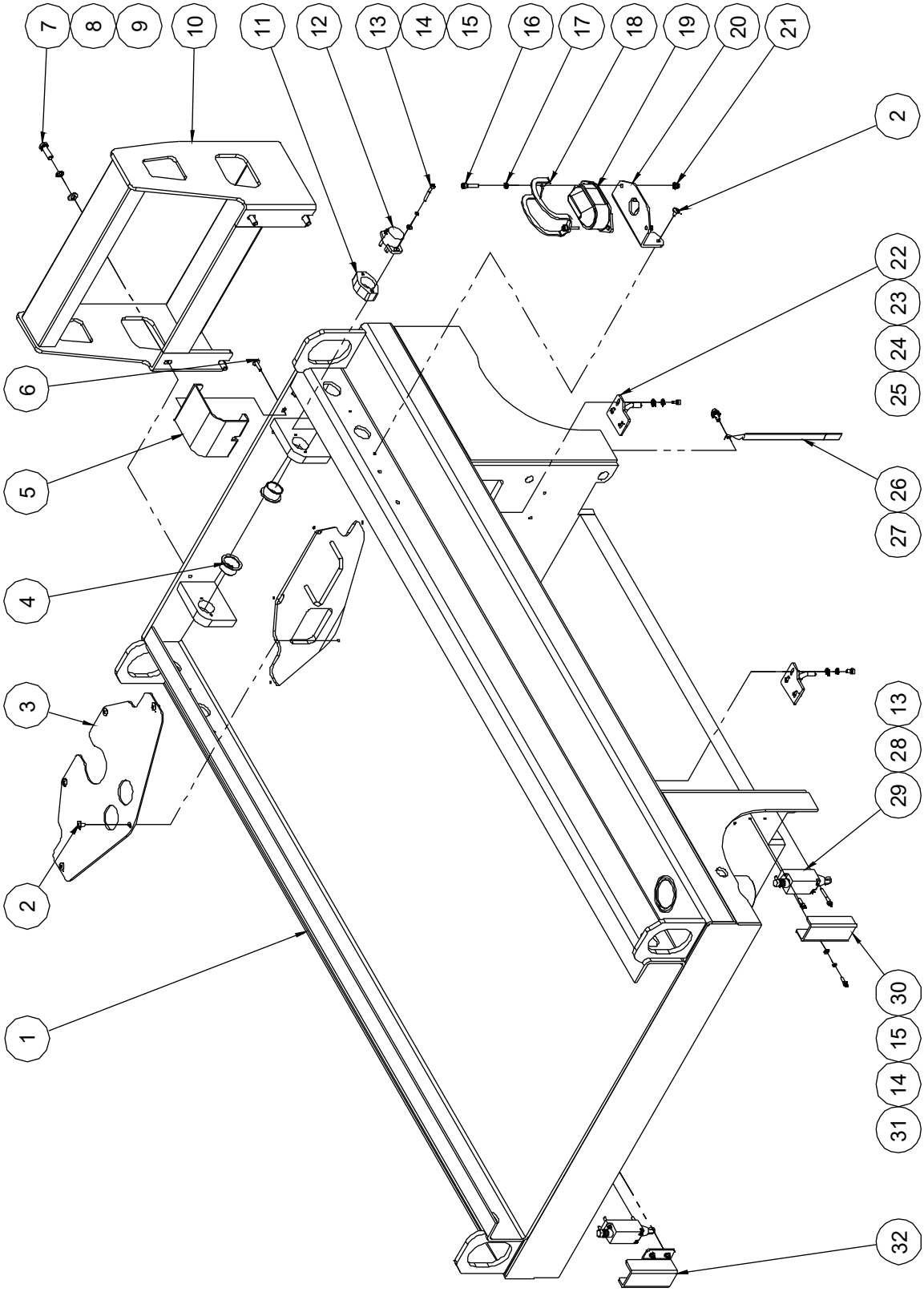

108.1 Ladder and Accessories

Item	Part No.	Description	Qty.
1	10007809	Frame weldment	1
2	00000999	Screw GB/T 973 M5×10	7
3	10002118	Cover	1
4	00000229	8822-25165 Bearing	2
5	10002962	Sensor cover	1
6	00002523	Screw GB/T 973 M5×16	2
7	00000993	Bolt GB/T 5783 M8×25	4
8	00000609	Washer GB/T 93 8	4
9	00000608	Washer GB/T 97.1 8	4
10	10002273	Ladder (without circuit breaker bracket)	1
	10004653	Ladder (with circuit breaker bracket)	1
11	10001569	Sensor bracket	1
12	00000644	Rotary sensor	1
13	00002415	Screw GB/T 70.1 M4×30	6
14	00000779	Washer GB/T 93 4	6
15	00000778	Washer GB/T 97.1 4	6
16	00002484	Screw GB/T 70.1 M5×25	2
17	00000605	Washer GB/T 97.1 5	2
18	10000488	Beacon cover	1
19	00000740	Beacon	1
20	10001565	Beacon bracket	1
21	00002573	Nut GB/T 6183.1 M5	2
22	10011886	Lock clasp	2
23	00007943	Washer GB/T 862.2 5	6
24	00007942	Washer GB/T 861.2 5	6
25	00001030	Screw GB/T 70.1 M5×10	6
26	10000487	Ground strap	1
27	00002865	Bolt QC/T 340 M6×14	1
28	00000604	Screw GB/T 70.1 M4×16	4

108.1 Ladder and Accessories

Item	Part No.	Description	Qty.
29	00002419	Limit switch	2
30	10001567	Switch cover	1
31	00001054	Screw GB/T 70.1 M4×12	4
32	10001566	Switch cover	1

Section 2
Scissor

201.1 Scissor Assembly

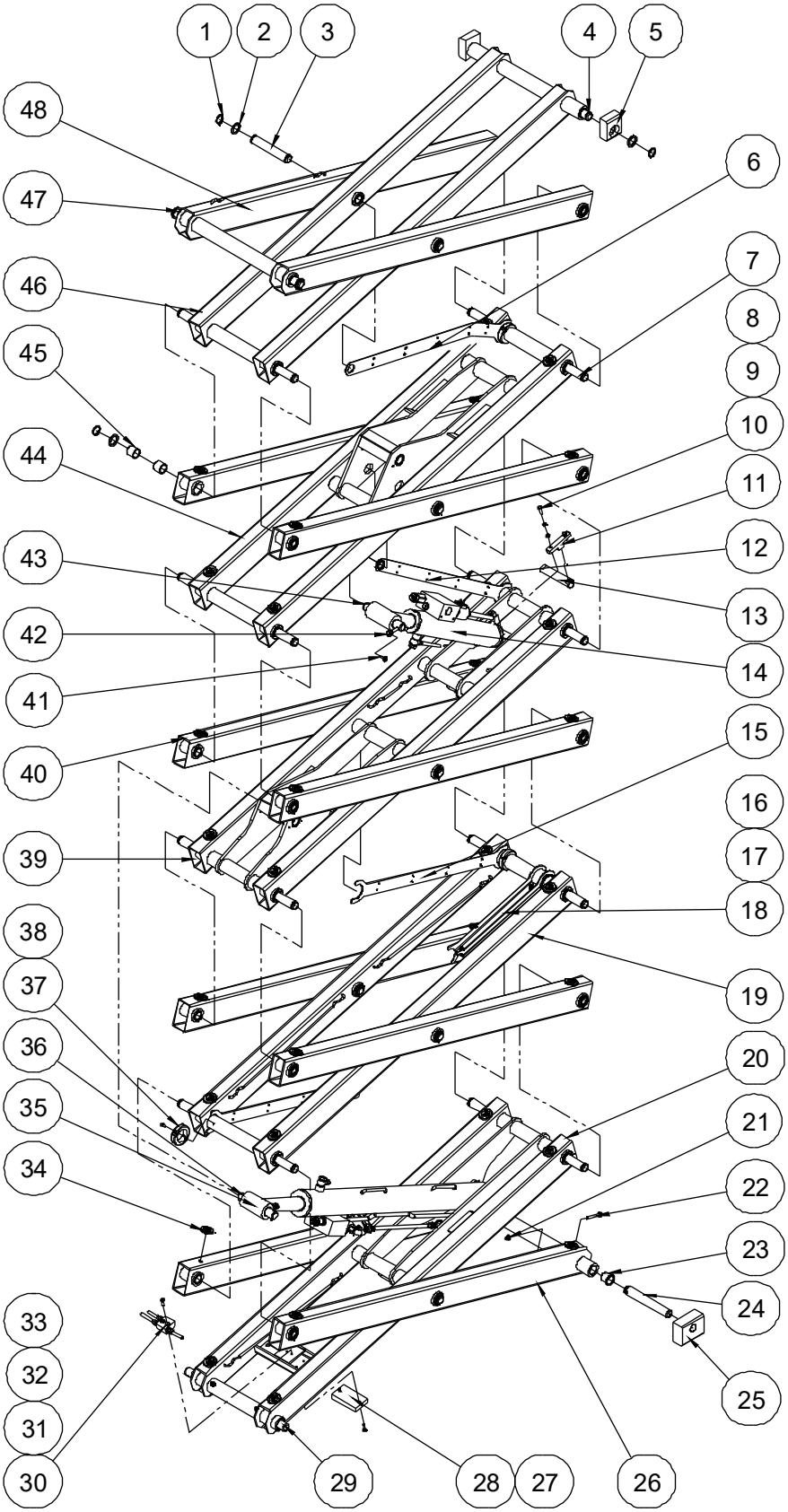

201.1 Scissor Assembly

Item	Part No.	Description	Qty.
1	00000781	Circlips JB/ZQ 4342-25	36
2	10001404	Washer	34
3	00000559	899-25136 Pin	6
4	00000561	899-25502 Pin	1
5	10001420	Platform slider	2
6	10004340	Cable bridge	1
7	00000560	899-25468 Pin	10
8	00001034	Screw GB/T 70.1 M6×25	4
9	00000621	Washer GB/T 93 6	4
10	00000620	Washer GB/T 97.1 6	4
11	10002310	Lock plate	2
12	10002308	Cable bridge	1
13	10002309	Pin	1
14		Upper lift cylinder assembly (without seal kit) (refer to 402.1)	1
15	10002307	Cable bridge	2
16	10001403	Safety arm bushing	2
17	10001402	Safety arm	2
18	00002866	Bolt QC/T 340 M6×20	2
19	10002302	Inner arm 2	1
20	10005735	Inner arm 1	1
21	00002569	Bolt GB/T 16674 M6×55	4
22	00002574	Nut GB/T 6183.1 M6	6
23	00003062	8822-25265 Bearing	28
24	00002334	896B-25×14 Pin	2
25	10002311	Chassis slider	2
26	10002304	Outer arm 1	1
27	00000832	Screw GB/T 70.3 M6×25	4
28	10001400	Pothole pusher	1

201.1 Scissor Assembly

Item	Part No.	Description	Qty.
29	10001405	Pin	1
30	10000425	Hydraulic hoses manifolds	1
31	10005753	Hose (to upper lift cylinder)	1
32	10005752	Hose (to lower lift cylinder)	1
33	10002367	Hose (to hydraulic tank)	1
34	10000264	Block	40
35		Lower lift cylinder assembly (without seal kit) (refer to 401.1)	1
36	00000584	895-25135 Pin	2
37	00000822	Screw GB/T 70.3 M5×16	3
38	10011776	Collar	3
39	10002301	Inner arm 3	1
40	10002305	Outer arm 2	6
41	00002864	Bolt QC/T 340 M6×16	3
42	00000217	8902-06045 Pin	3
43	00002938	895-25145 Pin	1
44	10004338	Inner arm 4	1
45	00000369	8812-252825 Bearing	64
46	10002306	Inner arm 5	1
47	00000562	899-25516 Pin	1
48	10002328	Outer arm 5	1

Section 3
Platform

301.1 Main Platform Assembly

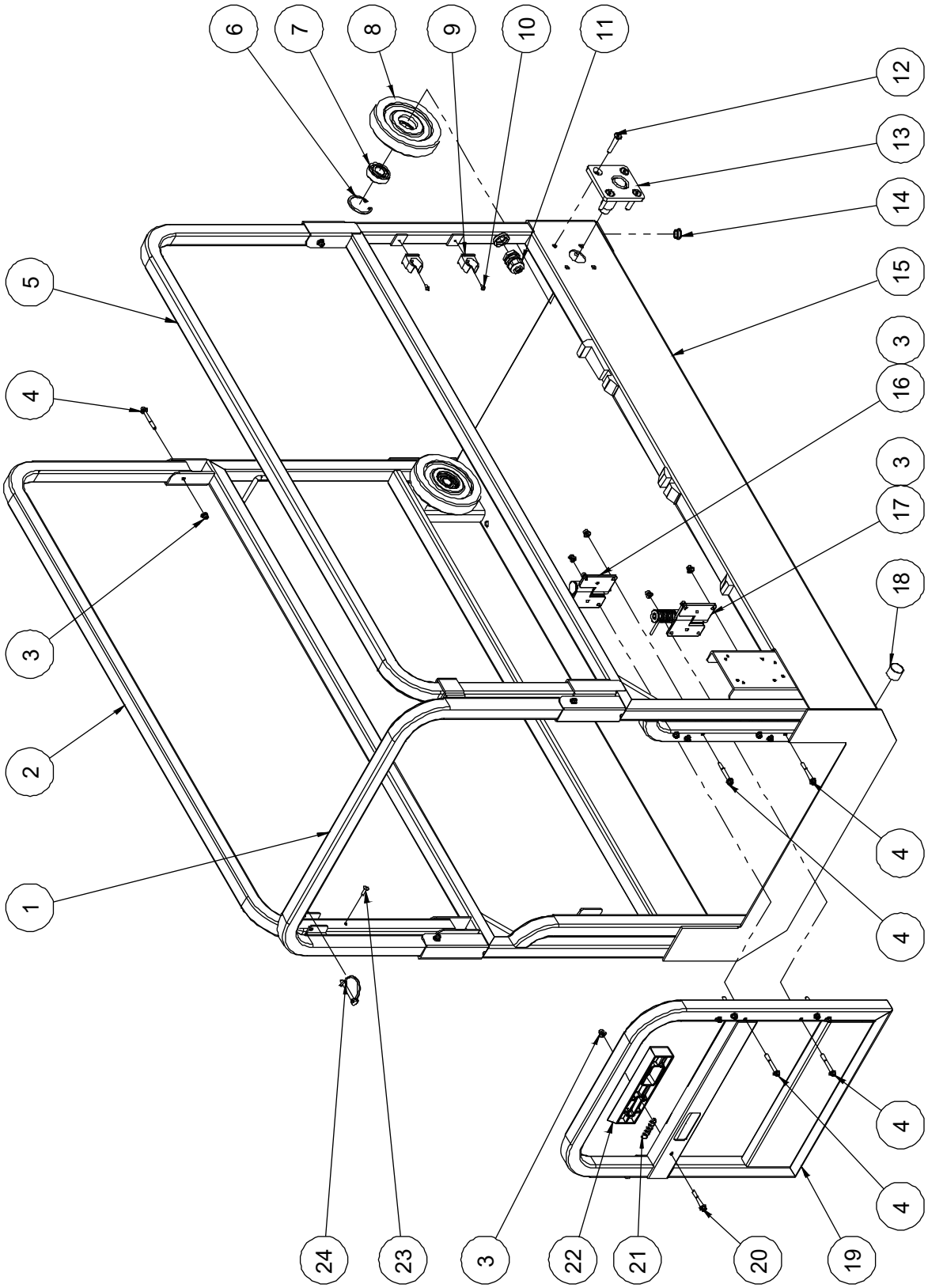

301.1 Main Platform Assembly

Item	Part No.	Description	Qty.
1	10001278	Rear rail	1
2	10002354	Upper main rail, left	1
3	00002574	Nut GB/T 6183.1 M6	19
4	00002581	Bolt GB/T 16674 M6×50	18
5	10002355	Upper main rail, right	1
6	00000887	Circlips GB/T 893.1-47	2
7	00001295	Bearing GB/T 276-1994 - 6204	2
8	10002031	Roller	2
9	00001823	Clip 24	2
10	00004385	Screw GB/T 823 M4×8	2
11	00002316	Water-proof joint M24	1
12	00001154	Screw GB/T 70.3 M8×45	8
13	10000307	Roller bracket	2
14	10001389	Sheath	1
15	10002347	Main deck weldment	1
16	10000299	Hinge A	1
17	10000302	Hinge B	1
18	00000368	8812-252820 Bearing	2
19	10001250	Entry gate	1
20	00002585	Bolt GB/T 16674 M6×45	1
21	10002379	Spring	1
22	10001255	Latch handle	1
23	00001991	Rivet GB/T 12618.4 4.8×16	2
24	10001178	Inserted pin	2

302.1 Platform Extension Assembly

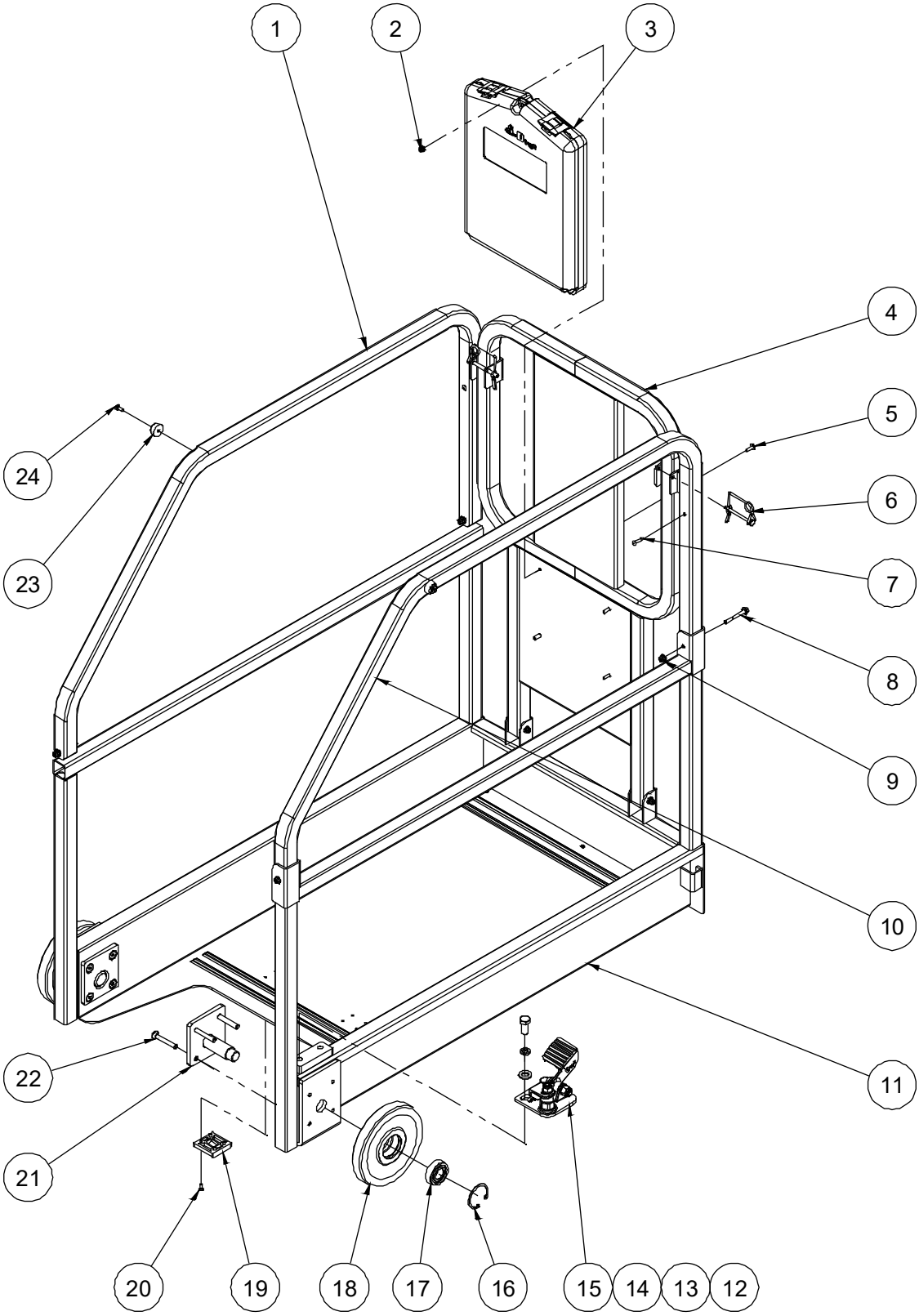

302.1 Platform Extension Assembly

Item	Part No.	Description	Qty.
1	10001245	Upper extension rail, left	1
2	00002573	Nut GB/T 6183.1 M5	4
3	50000555	Manual box	1
4	10001266	Front rail	1
5	00002523	Screw GB/T 973 M5×16	4
6	10001178	Inserted pin	2
7	00001991	Rivet GB/T 12618.4 4.8×16	2
8	00002581	Bolt GB/T 16674 M6×50	6
9	00002574	Nut GB/T 6183.1 M6	6
10	10001247	Upper extension rail, right	1
11	10012846	Extension deck weldment	1
12	00000816	Bolt GB/T 5783 M12×25	2
13	00000815	Washer GB/T 93 12	2
14	00000814	Washer GB/T 97.1 12	2
15	10012174	Platform locking device assembly (refer to 303.1)	1
16	00000887	Circlips GB/T 893.1-47	2
17	00001295	Bearing GB/T 276-1994 - 6204	2
18	10002054	Roller	2
19	10000046	Slide pad	2
20	00002337	Screw GB/T 819 M5×12 - H	8
21	10000307	Roller bracket	2
22	00001155	Screw GB/T 70.3 M8×55	8
23	10000376	Bumper	2
24	00000607	Screw GB/T 818 M5×12 - H	2

303.1 Platform Locking Device Assembly

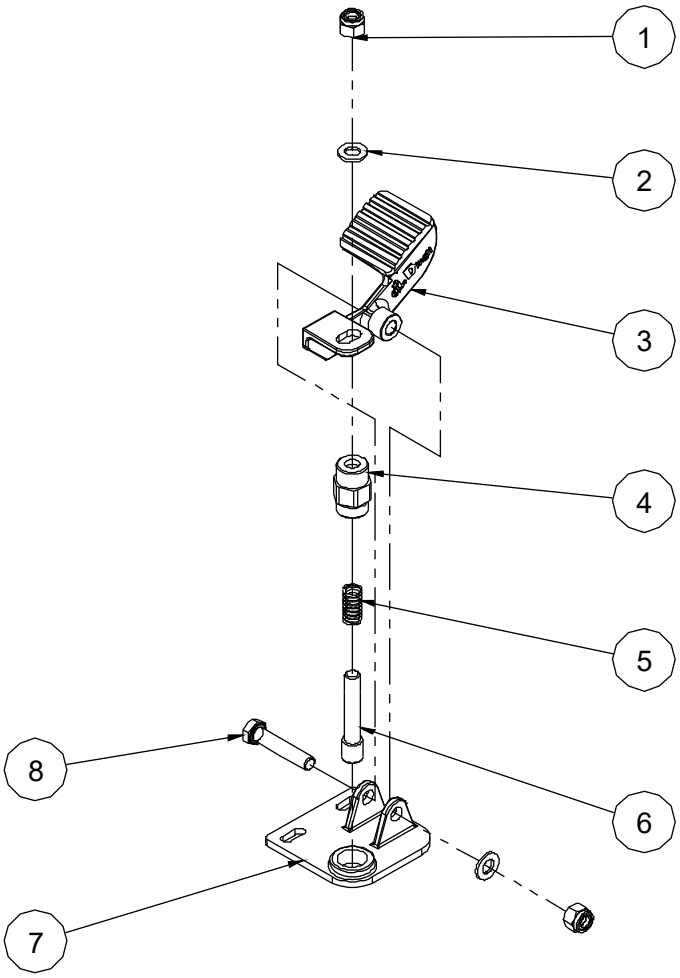

303.1 Platform Locking Device Assembly

Item	Part No.	Description	Qty.
1	00000623	Nut GB/T 6182 M10	2
2	00000615	Washer GB/T 97.1 10	2
3	10000334	Foot pedal	1
4	10000337	Lock pin housing	1
5	10000336	Spring	1
6	10000338	Lock pin	1
7	10012175	Bracket	1
8	00002030	Bolt GB/T 5782 M10×50	1

304.1 Platform Control Assembly

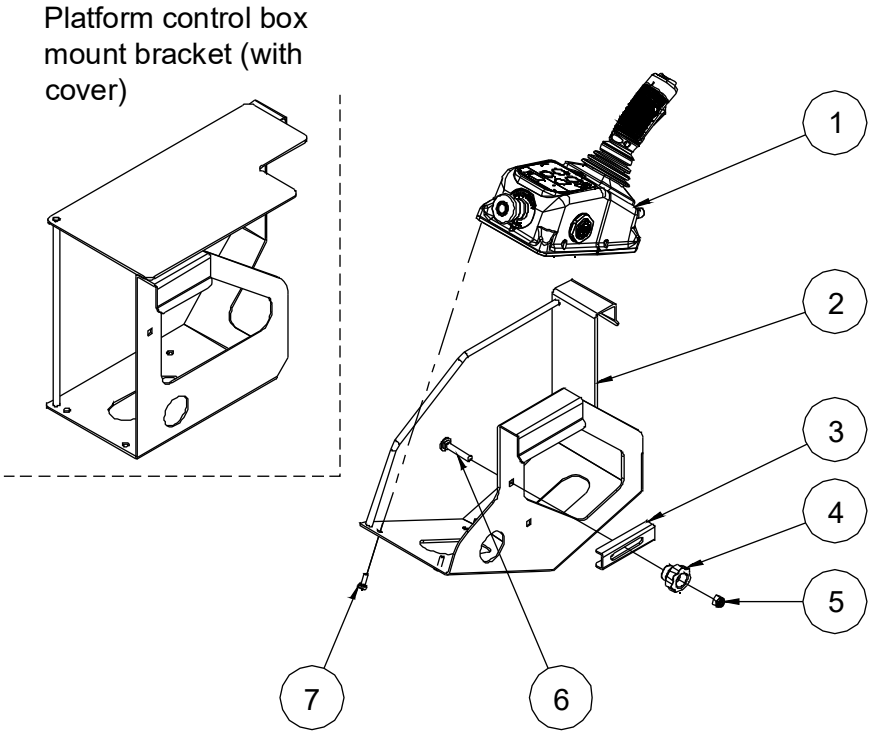

304.1 Platform Control Assembly

Item	Part No.	Description	Qty.
1	00004632	Platform control box assembly (refer to 305.1)	1
2	10001251	Platform control box mount bracket	1
	10001949	Platform control box mount bracket (with cover)	1
3	10002023	Locating plate	1
4	10004827	Handle	1
5	00001163	Nut GB/T 6182 M8	1
6	00004384	Bolt GB/T 801 M8×45	1
7	00001986	Screw GB/T 818 M6×16 - H	4

305.1 Platform Control Box Assembly

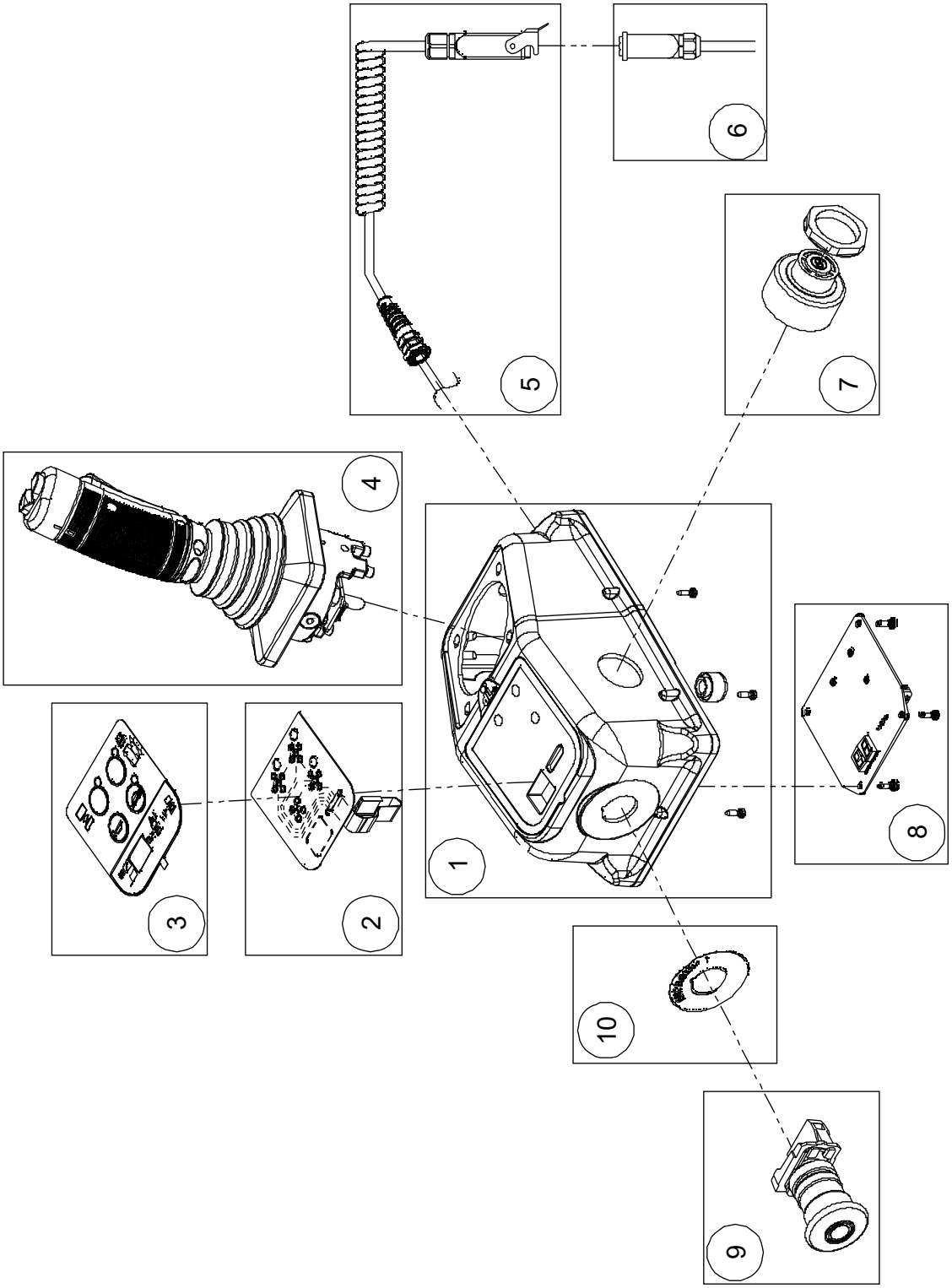

305.1 Platform Control Box Assembly

Item	Part No.	Description	Qty.
1	00004224	PCU housing	1
2	00004225	Keyboard	1
3	09140006	Decal, Platform control panel	1
4	00002324	Joystick	1
--	00004226	Switch boot	1
5	00004633	Coil cord	1
--	00005234	Housing	1
--	00004637	Male insert	1
--	00004755	Male contacts	5
--	00003043	Cable gland	1
6	00004606	Platform control box harness	1
--	00005233	Hood	1
--	00004638	Female insert	1
--	00004754	Female contacts	5
--	00003043	Cable gland	2
7	00002326	Alarm	1
8	00002322	Main board	1
9	00003718	Emergency stop switch	1
--	00003719	Red mushroom head	1
--	00003720	Base with 1 NC contact	1
10	00002328	Decal, Emergency stop panel	1

Section 4
Hydraulic System

401.1 Lower Lift Cylinder Assembly

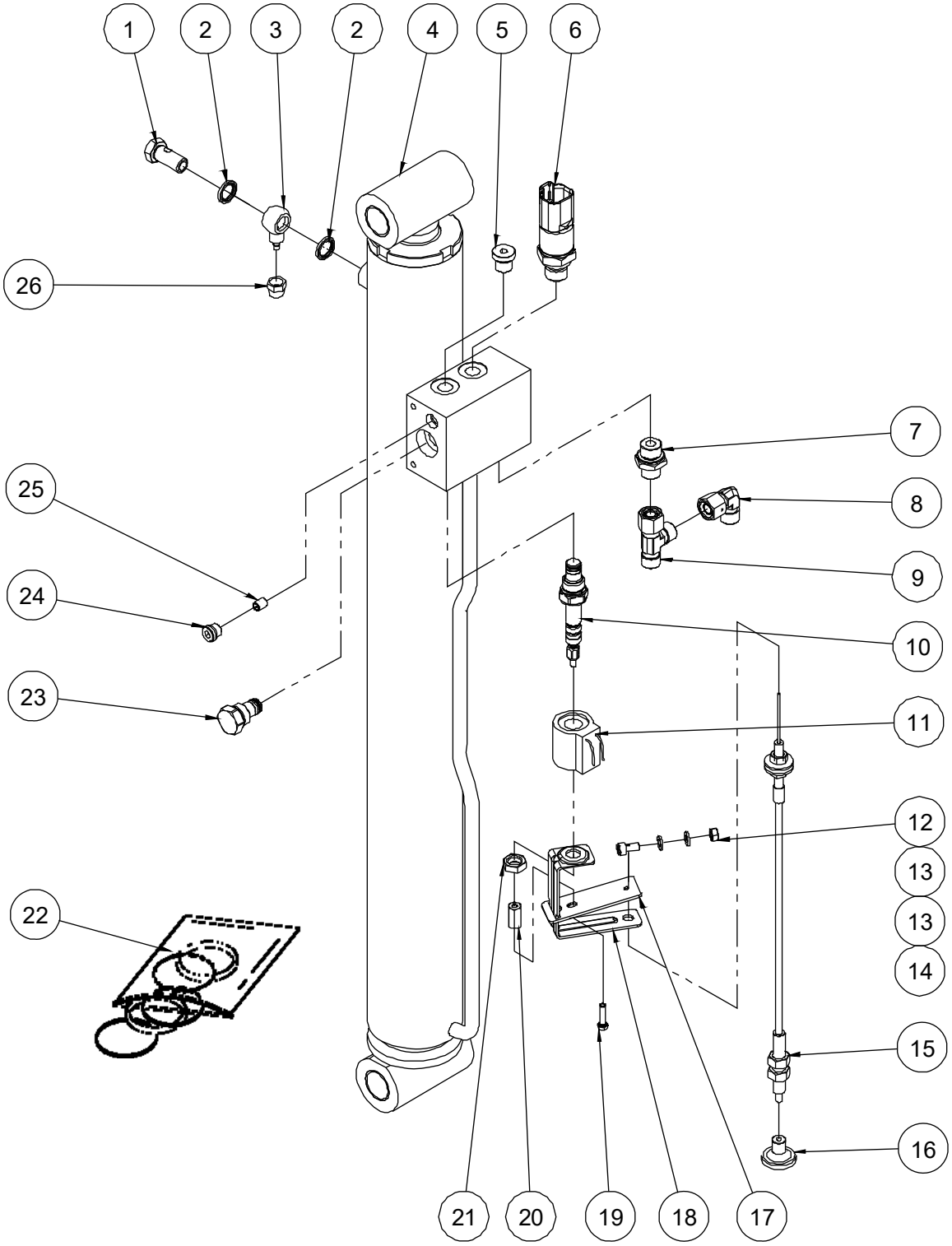

401.1 Lower Lift Cylinder Assembly

Item	Part No.	Description	Qty.
1	10000464	Fitting	1
2	00002519	Washer BS/A 13.74	2
3	10000465	Fitting	1
4	10014122	Lower lift cylinder	1
5	00001073	Plug VSTI14×1.5ED	1
6	00007393	Pressure sensor	1
7	00001292	Straight fitting	1
8	00001833	Elbow	1
9	00001238	Tee fitting	1
10	00005216	Solenoid valve spool	1
11	00003119	Coil	1
12	00002247	Nut GB/T 6170 M6	1
13	00000620	Washer GB/T 97.1 6	2
14	10001457	Screw	1
15	10005769	Emergency down cable assembly	1
16	10001458	Lowering knob	1
17	10014678	Plate	1
18	10014679	Support	1
19	00002268	Bolt GB/T 5783 M5×20	1
20	10005888	Cable connector	1
21	00005377	Nut 1/2-20UNF	1
22	00003336	Seal kit	1
23	10000404	Check valve	1
24	00002998	Plug SAE4	1
25	00003027	Orifice Φ1.5	1
26	10000462	Nut	1

402.1 Upper Lift Cylinder Assembly

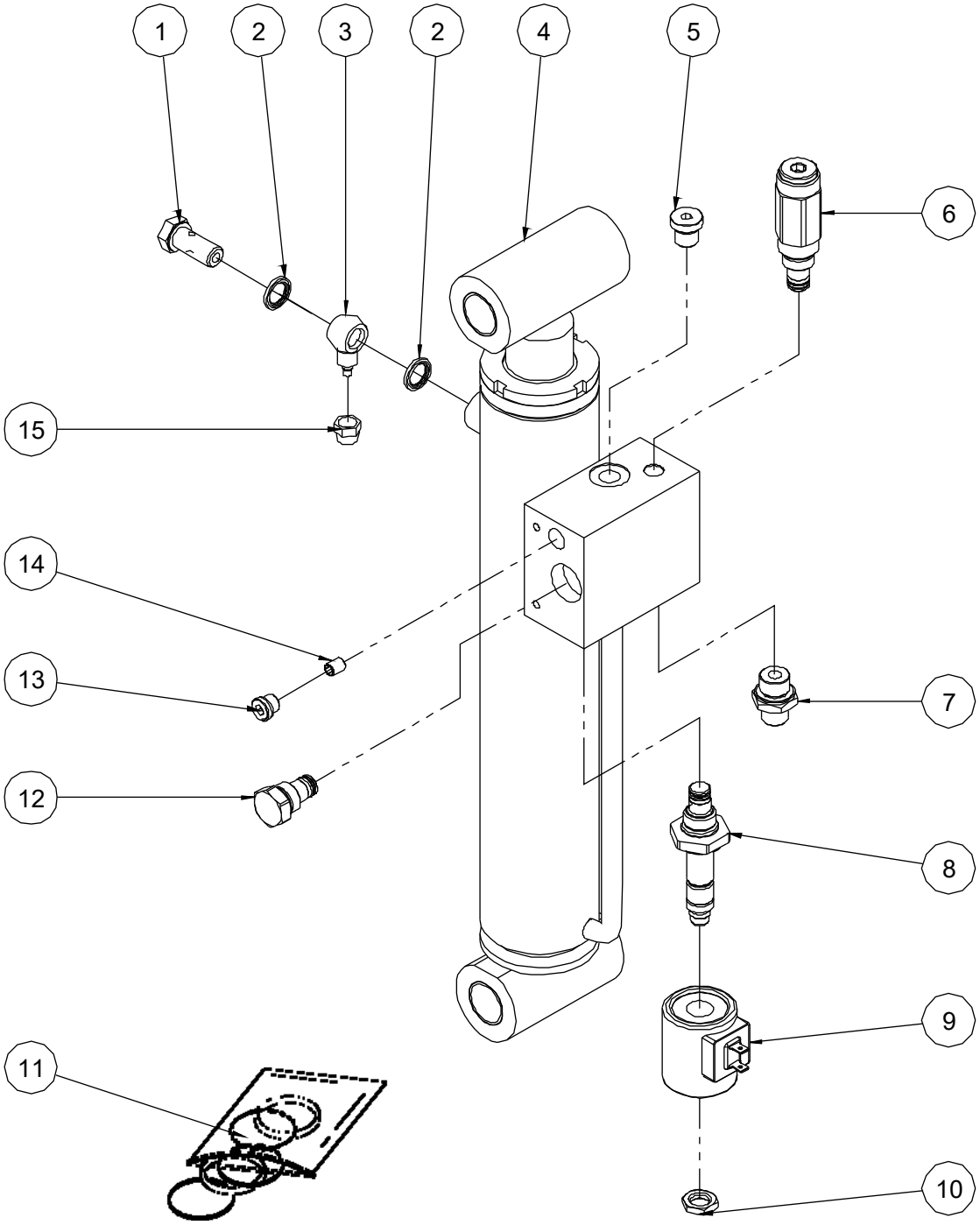

402.1 Upper Lift Cylinder Assembly

Item	Part No.	Description	Qty.
1	10000464	Fitting	1
2	00002519	Washer BS/A 13.74	2
3	10000465	Fitting	1
4	10014126	Upper lift cylinder	1
5	00001073	Plug VSTI14×1.5ED	1
6	10000086	Relief valve	1
7	00001292	Straight fitting	1
8	00004686	Solenoid valve spool	1
9	00003018	Coil	1
10	00003017	Nut	1
11	00003337	Seal kit	1
12	10000404	Check valve	1
13	00002998	Plug SAE4	1
14	00003028	Orifice Φ0.7	1
15	10000462	Nut	1

403.1 Hydraulic Hoses and Fittings

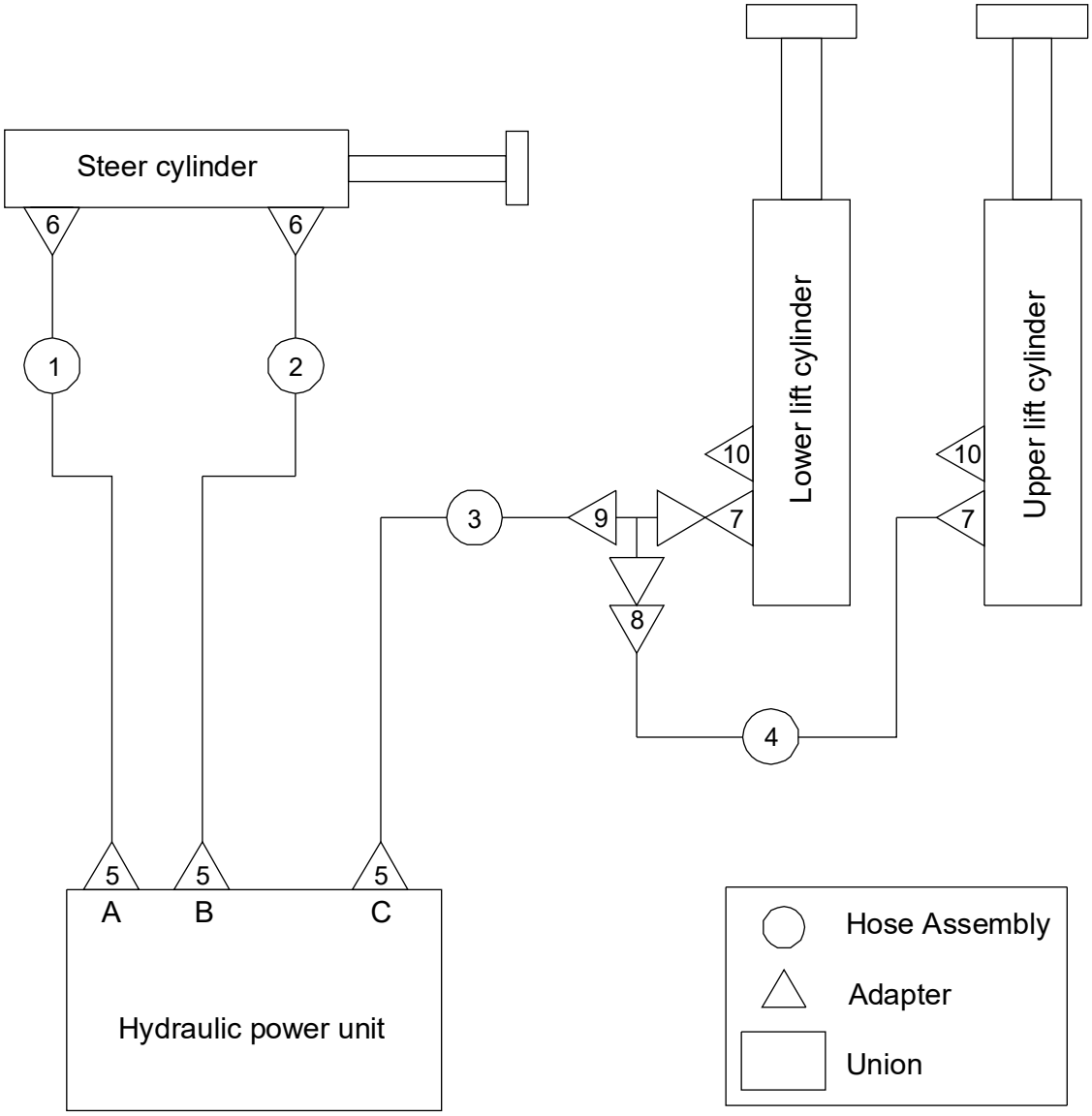

403.1 Hydraulic Hoses and Fittings

Item	Part No.	Description	Qty.
1	00002296	Hose assembly	1
2	00002471	Hose assembly	1
3	00004582	Hose assembly	1
4	00005053	Hose assembly	1
5	00001318	Straight fitting	3
6	00001290	Straight fitting	2
7	00001292	Straight fitting	2
8	00001833	Elbow	1
9	00001238	Tee fitting	1
10	00001073	Plug VSTI14×1.5ED	2

Section 5
Electrical System

501.1 Electrical Harness

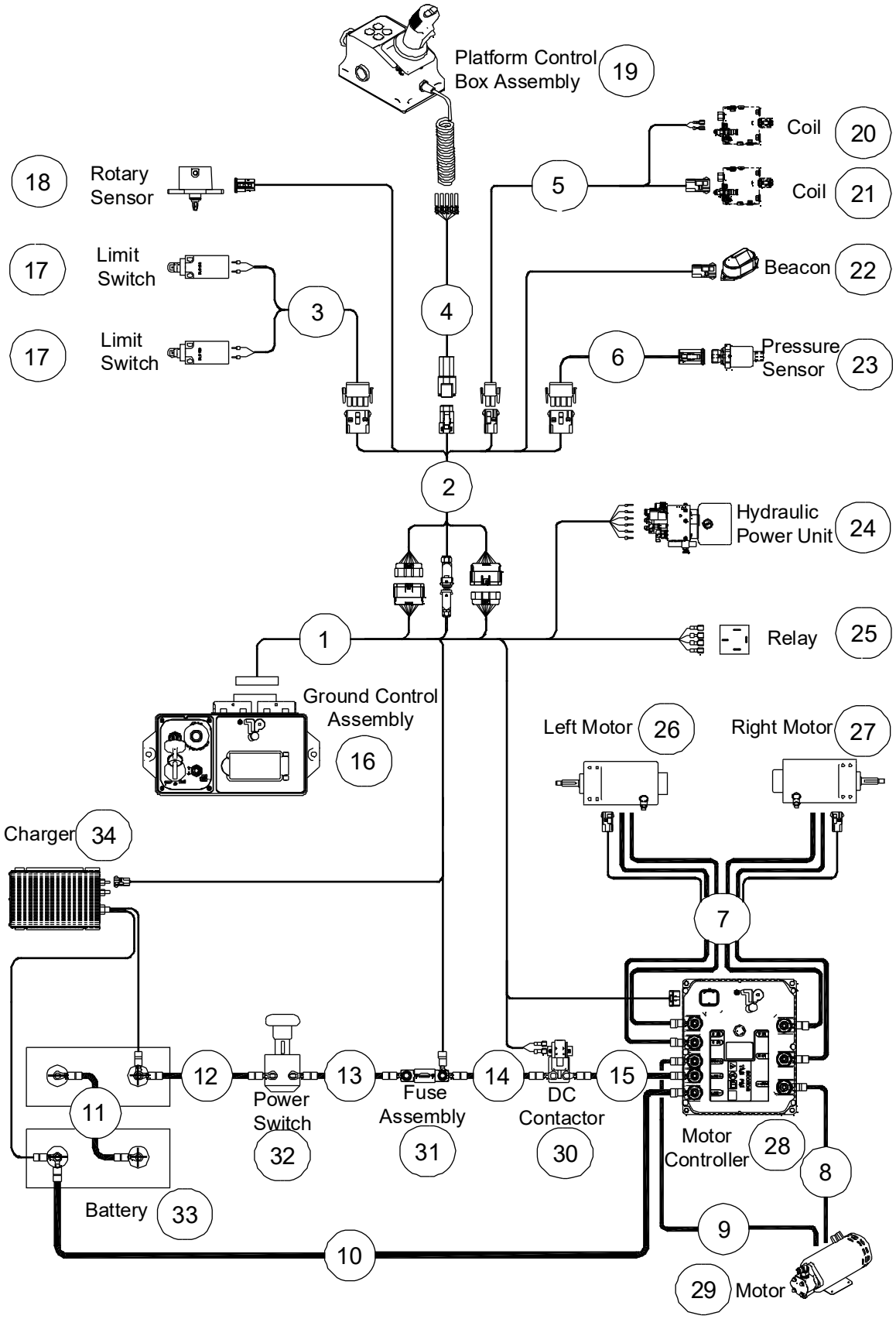

501.1 Electrical Harness

Item	Part No.	Description	Qty.
1	00004599	ECU harness	1
2	00007564	Towline harness	1
3	00008065	Pothole harness	1
4	00008070	Platform control box harness	1
5	00008063	Lowering valve harness	1
6	00008064	Pressure sensor harness	1
7	00003863	Drive motor harness	1
8	00003469	Pump motor negative harness	1
9	00002960	Pump motor positive harness	1
10	00002655	Battery negative harness	1
11	00002955	Battery harness	1
12	00002961	Battery positive harness	1
13	00003468	Fuse harness	1
14	00002956	DC contactor harness	1
15	00003470	Motor controller harness	1
16	00002362B	Ground control assembly	1
17	00002419	Limit switch, pothole	2
18	00000644	Rotary sensor	1
19	00004632	Platform control box assembly	1
20	00003018	Coil	1
21	00003119	Coil	1
22	00000740	Beacon	1
23	00007393	Pressure sensor	1
24	00004274	Hydraulic power unit	1
25	00002561	Relay	1
26	00005192	Left drive motor assembly	1
27	00005131	Right drive motor assembly	1
28	00005227	Motor controller	1
29	00004276	Motor	1

501.1 Electrical Harness

Item	Part No.	Description	Qty.
30	00002028	DC contactor	1
31	00003069	200A Fuse assembly	1
32	00000655	Power switch	1
33	00002200	Battery	2
34	00005060	Charger	1

502.1 Power to Platform

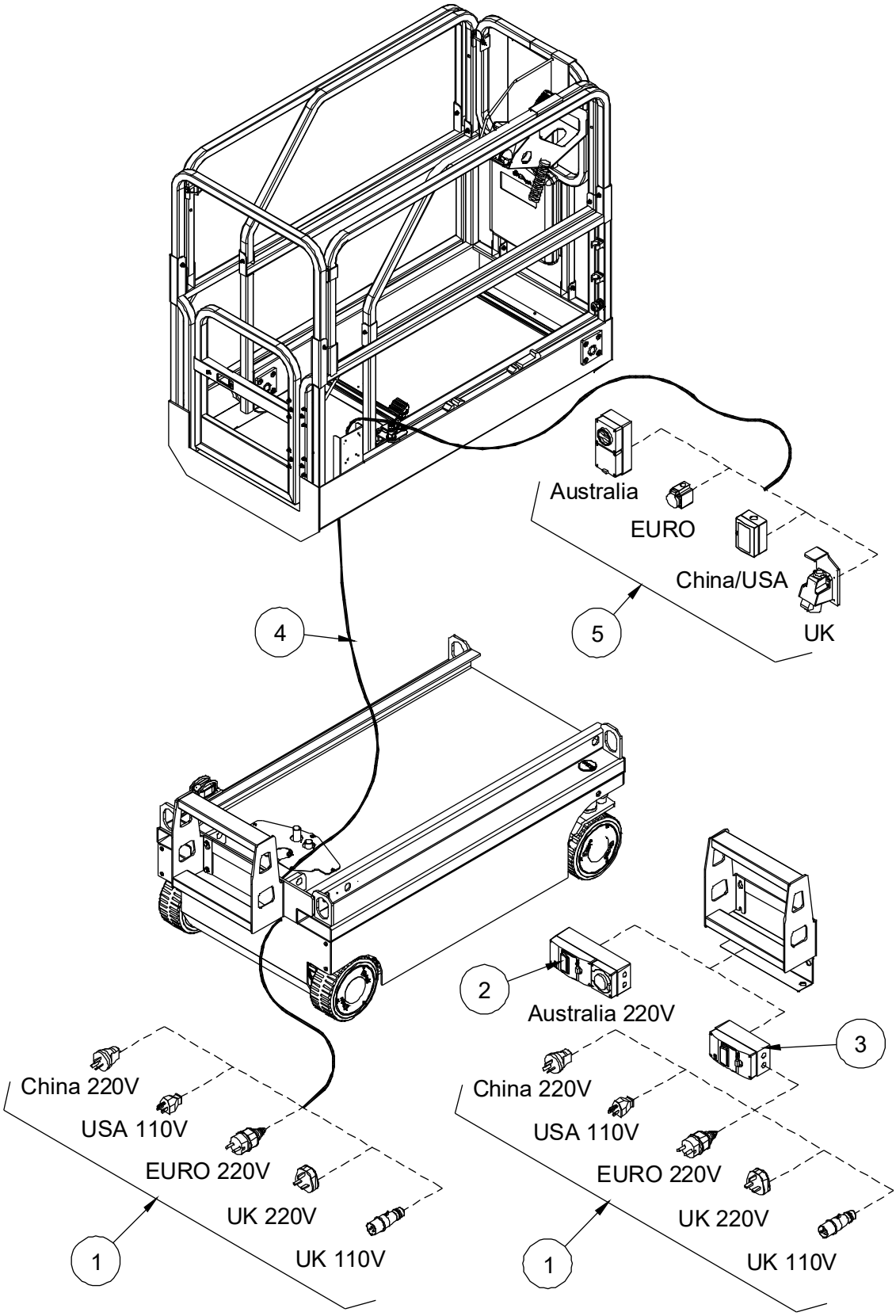

502.1 Power to Platform

Item	Part No.	Description	Qty.
1	00003148	AC plug (China 220V)	1
	00003149	AC plug (USA 110V)	1
	00003151	AC plug (European 220V)	1
	00003150	AC plug (UK 220V)	1
	00002615	AC plug (UK 110V)	1
2	00003147	AC plug (Australia 220V)	1
3	00002634	Circuit breaker (Option)	1
4	00003335	Wire cable, platform AC power	1
5	00002617	AC socket (Australia)	1
	00002709	AC socket (European)	1
	00000668	AC socket (China/USA)	1
	00004771	AC socket (UK) (AC socket bracket: 10016048)	1

Section 6
Decal

601.1 Decals with Words (CE)

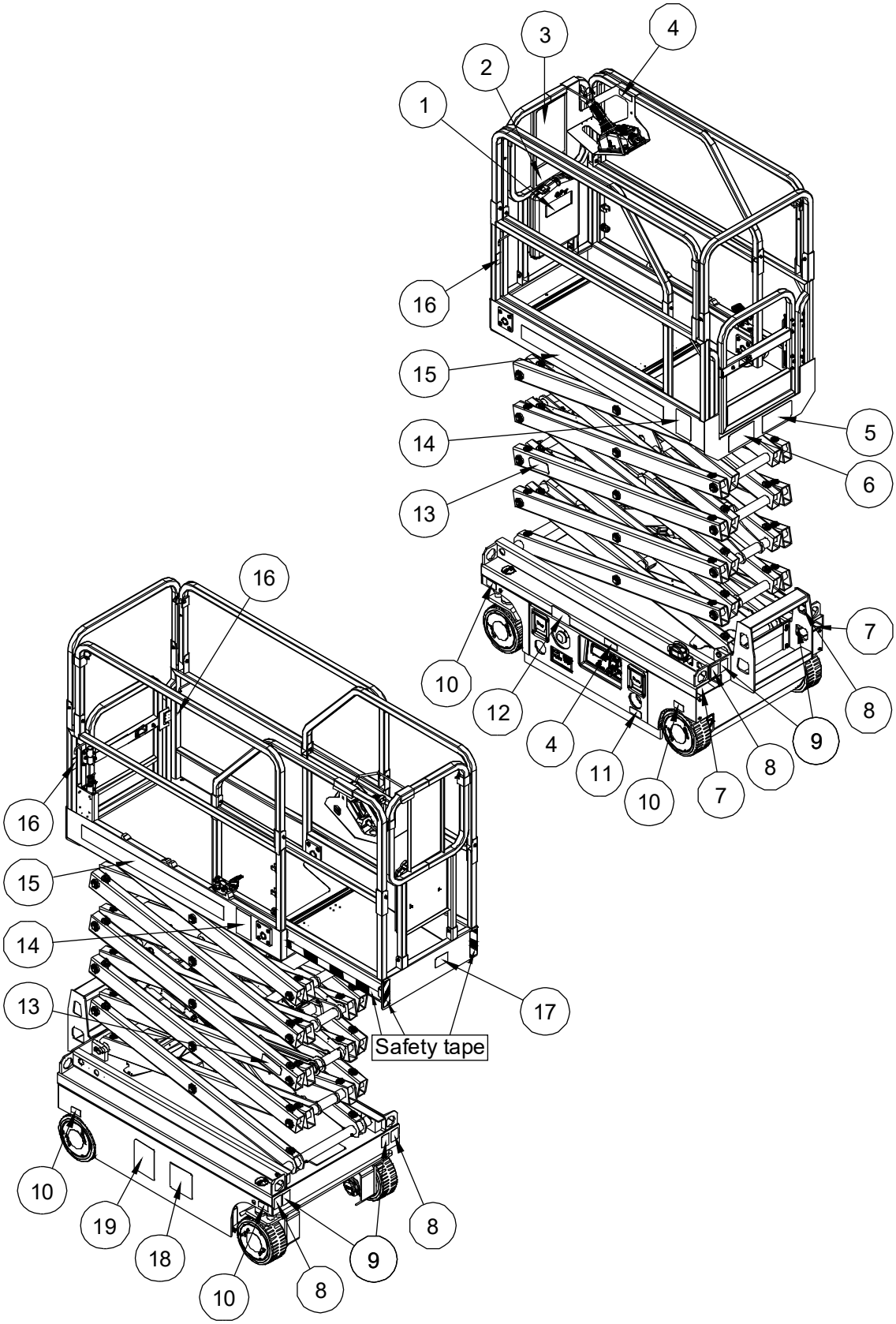

601.1 Decals with Words (CE)

Item	Part No.	Description	Qty.
1	09340001	Decal, Notice-Keep the manual with the machine	1
2	09440003	Decal, Danger-Tip-over hazard, tilt-alarm	1
3	09440001	Decal, Danger-General safety rules	1
4	09340003	Decal, Instructions-Refer the operator to the instructions for use	2
5	09440014	Decal, Label-Capacity 230kg	1
6	09440005	Decal, Warning-Use indoors only	1
7	09310001	Decal, Instructions-Forklift pockets	2
8	09310003	Decal, Instructions-Tie down point	4
9	09310002	Decal, Instructions-Lift point	4
10	09310031	Decal, Instructions-Maximum wheel load 570kg	4
11	09310004	Decal, Instructions-Emergency lower	1
12	09310034	Decal, Notice-Main power switch operation	1
13	09330001	Decal, Instructions-Safety arm	2
14	09440007	Decal, Caution-Max. manual force 400N	2
15	09640009	Decal, Cosmetic-JCPT0708DCS	2
16	09440011	Decal, Label-Lanyard anchorage point	3
17	09540001	Decal, Label-CE	1
18	09410001	Decal, Danger-Explosion/burn hazard	1
19	09410003	Decal, Warning-Inspected and operation properly	1

601.1 Decals with Words (CE)

602.1 Decals with Words (ANSI)

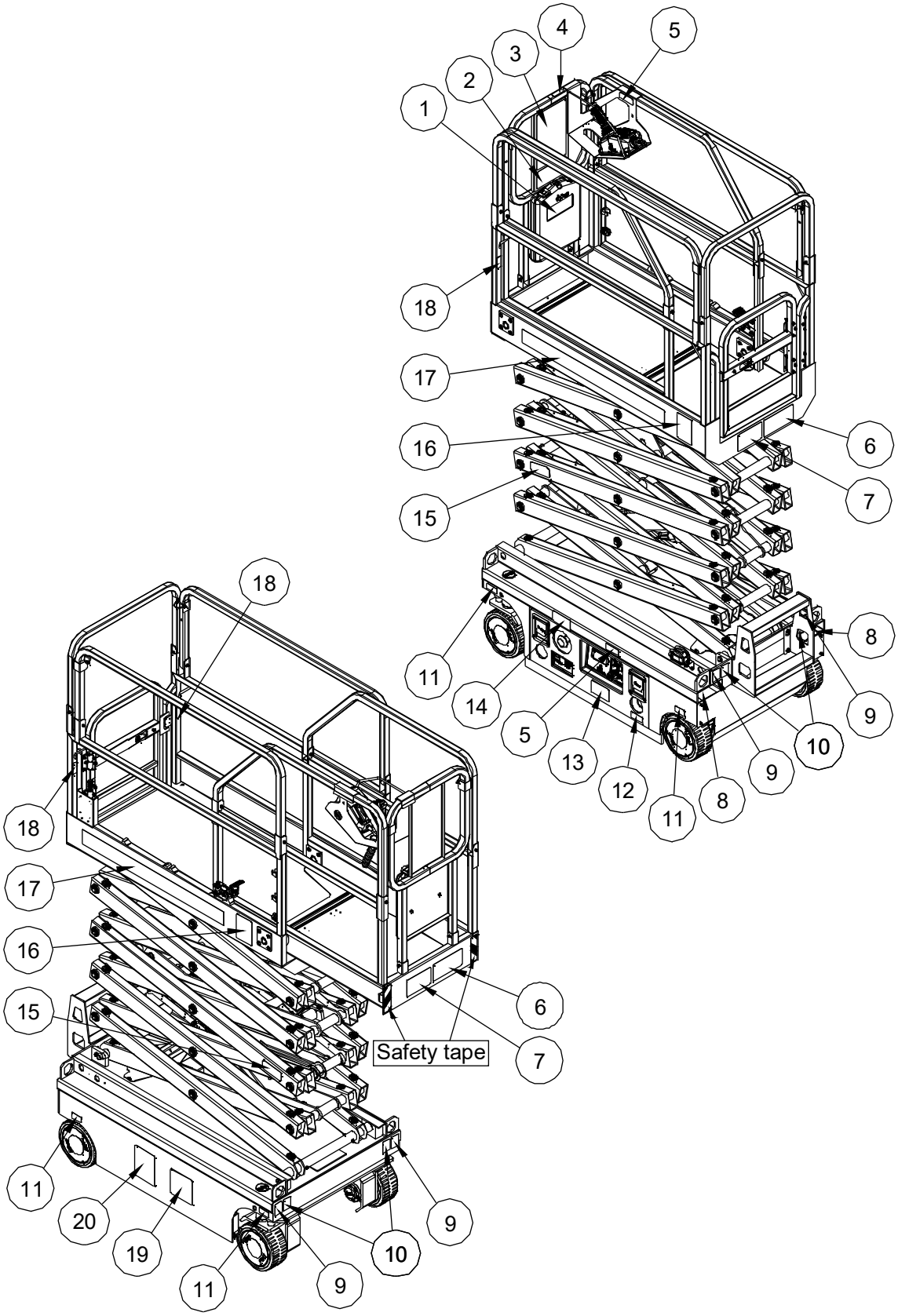

602.1 Decals with Words (ANSI)

Item	Part No.	Description	Qty.
1	09340001	Decal, Notice-Keep the manual with the machine	1
2	09440003	Decal, Danger-Tip-over hazard, tilt-alarm	1
3	09440037	Decal, Danger-General safety rules	1
4	09340005	Decal, Instructions-Platform controller normal position	1
5	09340003	Decal, Instructions-Refer the operator to the instructions for use	2
6	09440335	Decal, Label-Capacity 500 lbs 227kg	2
7	09440005	Decal, Warning-Use indoors only	2
8	09310001	Decal, Instructions-Forklift pockets	2
9	09310003	Decal, Instructions-Tie down point	4
10	09310002	Decal, Instructions-Lift point	4
11	09310033	Decal, Instructions-Maximum wheel load 1254 lbs 570kg	4
12	09310004	Decal, Instructions-Emergency lower	1
13	09410017	Decal, Warning-Change battery	1
14	09310034	Decal, Notice-Main power switch operation	1
15	09330001	Decal, Instructions-Safety arm	2
16	09440301	Decal, Caution-Max. manual force 90 lbs 400N	2
17	09640009	Decal, Cosmetic-JCPT0708DCS	2
18	09440011	Decal, Label-Lanyard anchorage point	3
19	09410001	Decal, Danger-Explosion/burn hazard	1
20	09410003	Decal, Warning-Inspected and operation properly	1

602.1 Decals with Words (ANSI)

603.1 Decals with Symbols (CE)

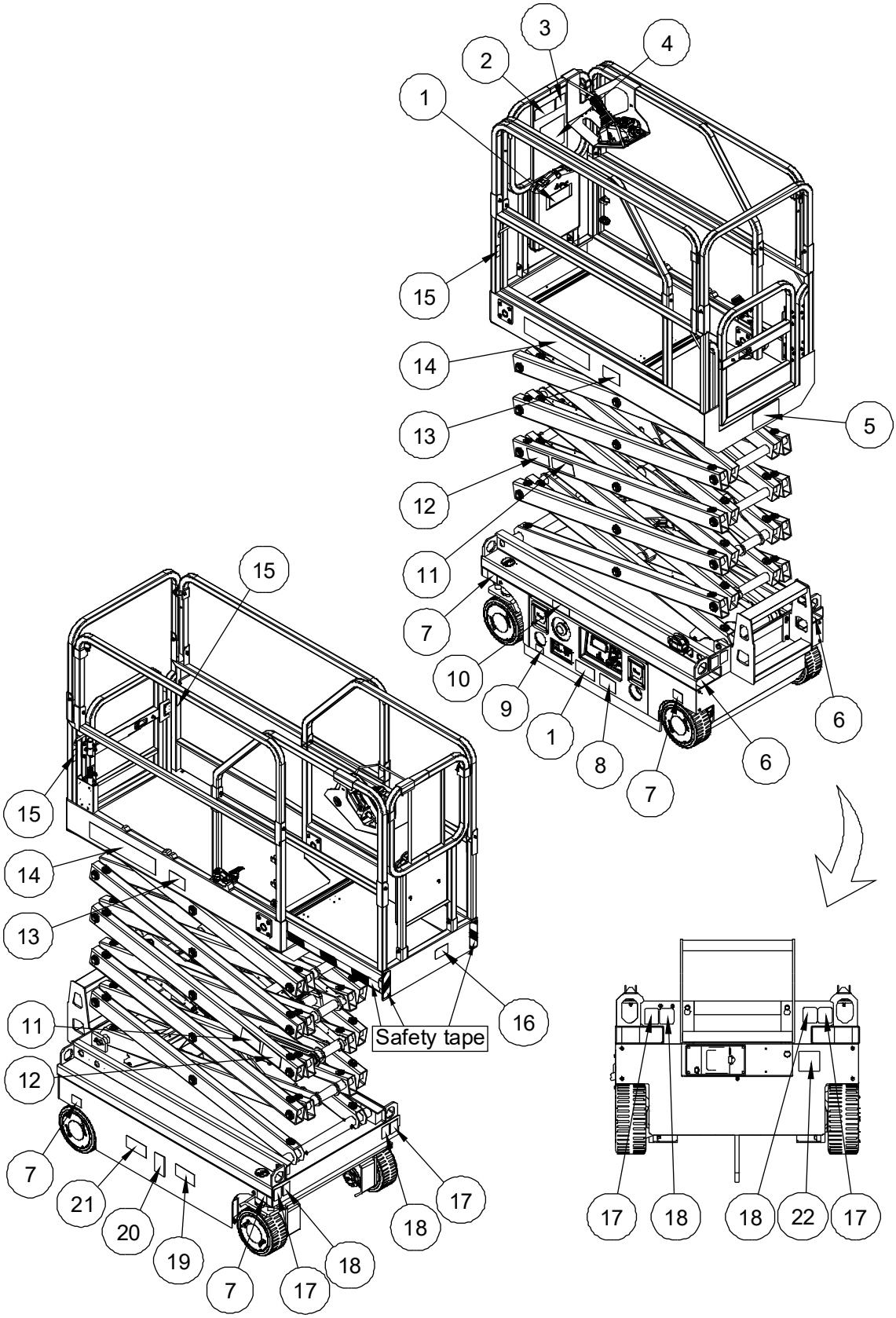

603.1 Decals with Symbols (CE)

Item	Part No.	Description	Qty.
1	09340026	Decal, Symbols-Refer the operator to the instructions for use	2
2	09440090	Decal, Symbols-Tip-over hazard, tilt-alarm	1
3	09340028	Decal, Instructions-Directional arrows	1
4	09440091	Decal, Symbols-General safety rules	1
5	09440014	Decal, Label-Capacity 230kg	1
6	09310001	Decal, Instructions-Forklift pockets	2
7	09310092	Decal, Instructions-Maximum wheel load 570kg	4
8	09310096	Decal, Symbols-Emergency lower	1
9	09310100	Decal, Symbols-Battery charging instructions	1
10	09310078	Decal, Symbols-Main power switch operation	1
11	09430009	Decal, Symbols-Keep away from moving parts	2
12	09430008	Decal, Symbols-Safety arm	2
13	09440086	Decal, Symbols-Max. manual force 400N (Indoor)	2
14	09640009	Decal, Cosmetic-JCPT0708DCS	2
15	09440089	Decal, Label-Lanyard anchorage point	3
16	09540001	Decal, Label-CE	1
17	09310003	Decal, Instructions-Tie down point	4
18	09310002	Decal, Instructions-Lift point	4
19	09410048	Decal, Symbols-Explosion/burn hazard	1
20	09410050	Decal, Symbols-Injection hazard	1
21	09410049	Decal, Symbols-Electrocution hazard	1
22	09310098	Decal, Symbols-Platform power instructions	1
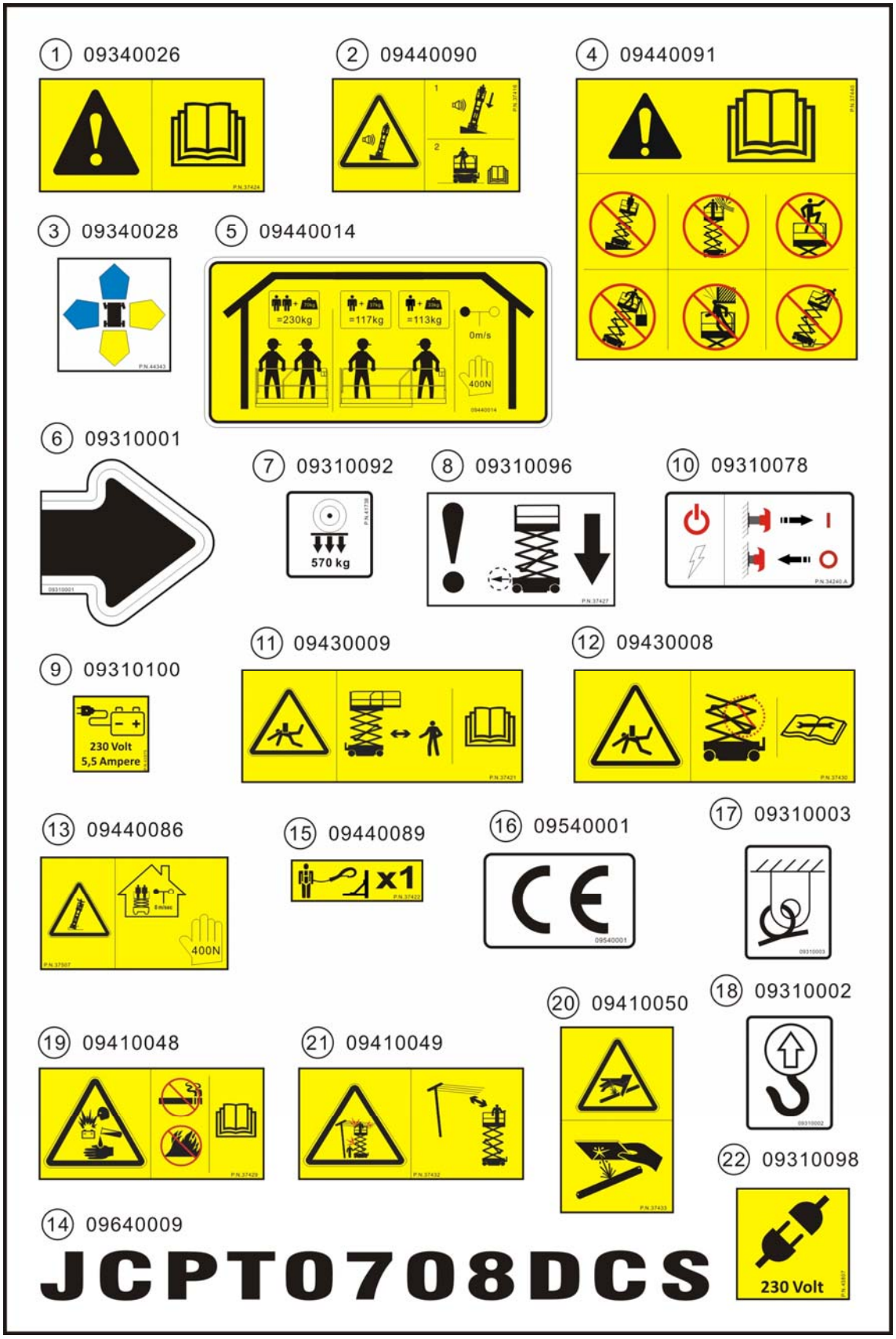
603.1 Decals with Symbols (CE)